DFH 22 - OVERALL DIMENSIONS

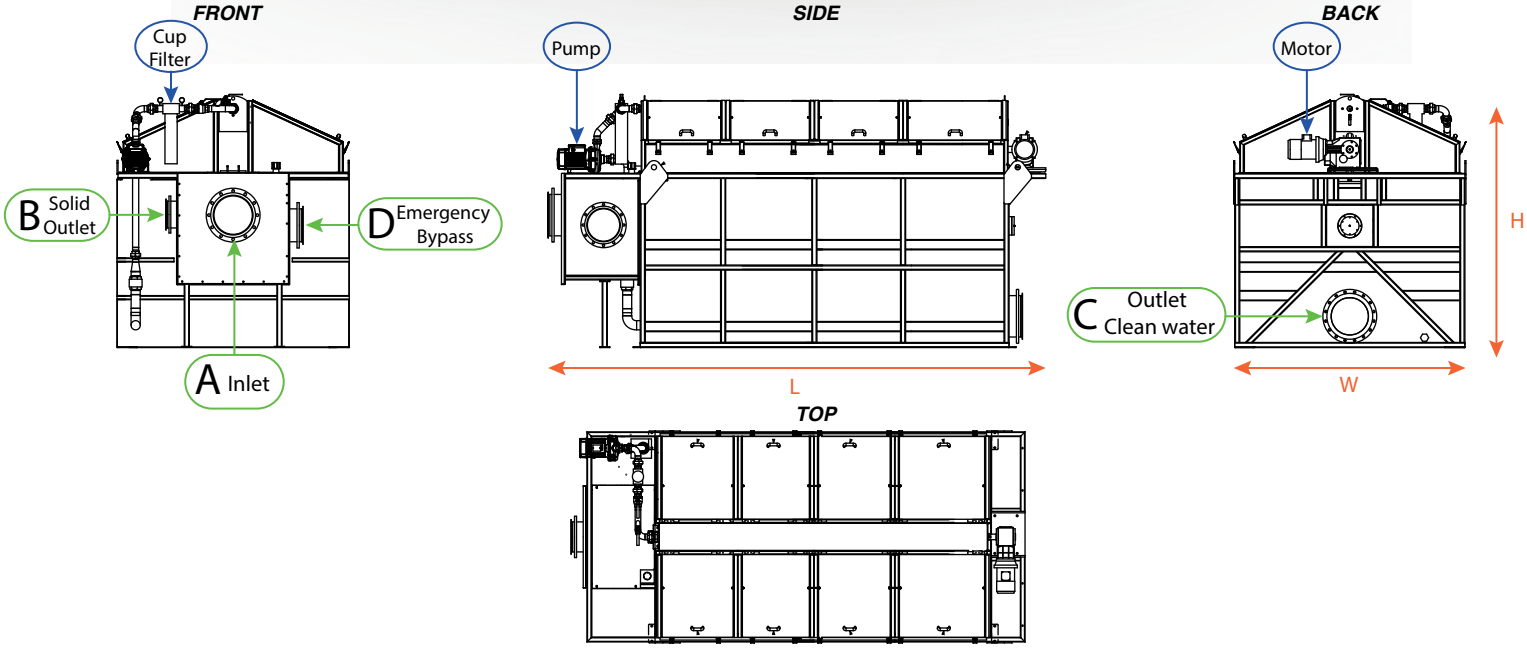

Overall Dimensions & Weight	***HW***	Height-Width	H 2470mm - W 2280mm					
	L	Length based on disc N°	N°2	N°4	N°6	N°8	N°10	N°12
			2249mm	2850mm	3330mm	3810mm	4290mm	4770mm
	Weight		1300Kg	1800Kg	2300Kg	2800Kg	3300Kg	3800Kg
N° of Disc			**N°2**	**N°4**	**N°6**	**N°8**	**N°10**	**N°12**
A	**Inlet**		DN200	DN200	DN250	DN300	DN350	DN400
B	**Outlet Solid discharge**		DN100	DN100	DN100	DN150	DN200	DN200
C	**Outlet Clean water**		DN250	DN250	DN300	DN350	DN350	DN400
D	**Emergency Bypass**		DN200	DN200	DN250	DN300	DN300	DN300
Pump Backwash Power/N° Disc			**N°2**	**N°4**	**N°6**	**N°8**	**N°10**	**N°12**
			2.2Kw	4Kw	5.5Kw	7.5Kw	7.5Kw	9Kw
N° of Nozzle each unit			36	72	108	144	180	216
Backwash Instant Consumption (Each nozzle 0.073l/s @ 4Bar)			2.64 l/s	5.28 l/s	7.92 l/s	10.56 l/s	13.2 l/s	15,84 l/s
Motor Power based on disc N°			N°2	N°4	N°6	N°8	N°10	N°12
			0.55Kw	0.75Kw	1.1Kw	1.1Kw	1.1Kw	1.5Kw

ALL MATERIALS & CONCEPTS SHOWN ARE OF THE EXCLUSIVE PROPRIETY OF FLUITECO AND CANNOT BE USED OR DISCLOSED WITHOUT FLUITECO CONSENT AND WRITTEN AUTHORIZATION. NO REPRODUCTION ALLOWED.